PVM400 115 vac basic 2010-11

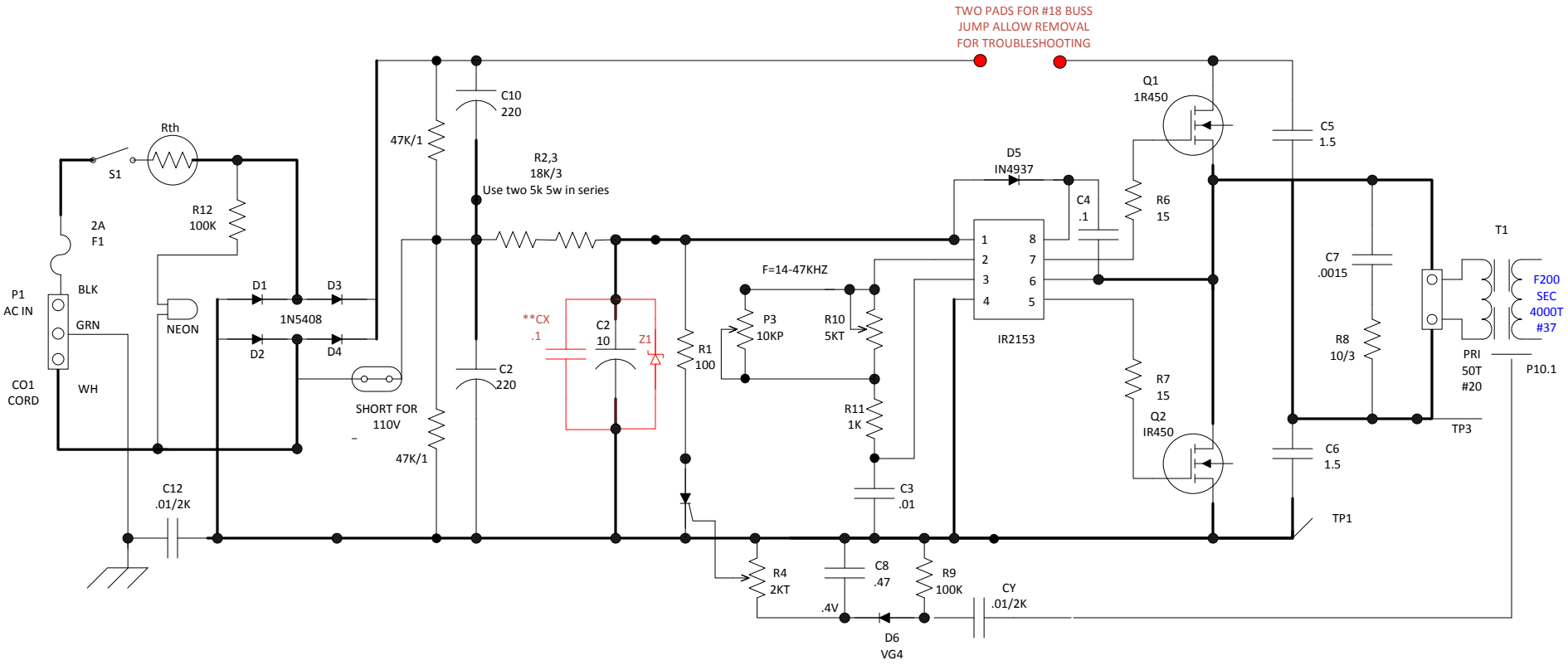

Proprietary and intellectual property of INFORMATION UNLIMITED PO Box 716
Amherst N.H. 03057 Tel# 1 603 673 6493/4730 Fax# 1 603 672 5406
tech@amazing1.com | www.amazing1.com